STOKKE™

Tripp Trapp®

USER GUIDE AU

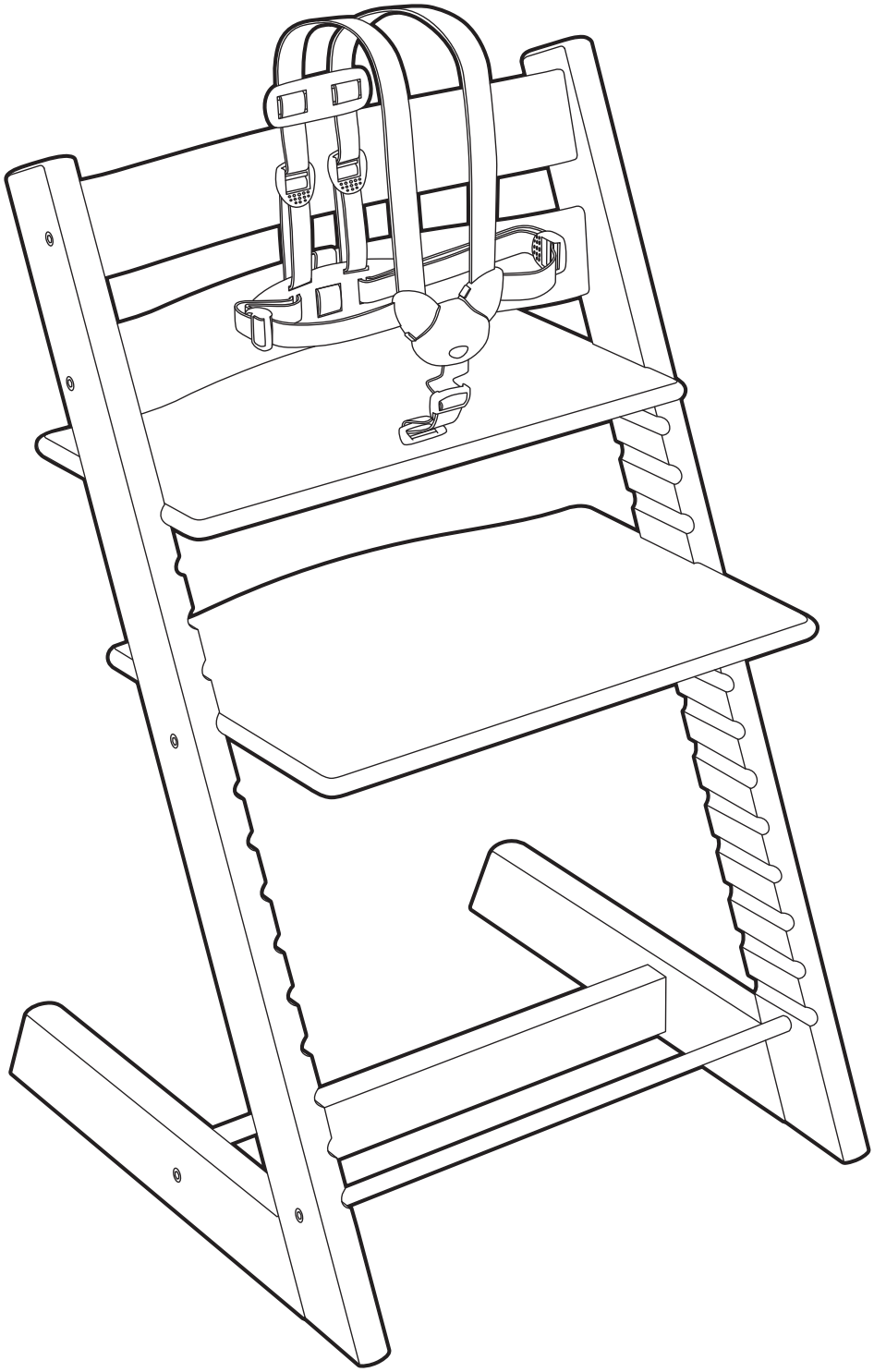

⚠WARNING! Prevent serious injury or death from falls or sliding out

- Follow the manufacturers instructions
- Do not leave child unattended
- The Tripp Trapp® Baby Set™ should only be used with the seat plate in the first groove from the top of the chair.
- Always use the restraint system when the seat is in one of the top 3 grooves
- The harness must always be used and correctly fitted – most injuries from high chair are caused by falls
- Always keep child in view
- Stay in reach of your child.
- Do not use the chair unless all components are correctly fitted and adjusted. Pay special attention to the seat and foot plate – make sure these are properly fastened before you put your child into the chair.
- Do not place the chair near an open fire or other sources of strong heat, such as electric bar fires, gas fires etc due to the risk of fire.
- Always place the chair on a level stable surface and make sure that the chair has space to slide backwards.
- Position the high chair away from solid structures and benches to avoid injuries caused by falls and by access to dangerous items.
- Position the high chair away from furniture, walls, hot surfaces and liquids, window covering cords and electrical cords and position the high chair away from furniture when the chair is not being used at a table with a tray removed.
- Do not use any accessories or replacement parts not manufactured by STOKKE®; this may affect your child's safety.
- Do not use the chair if any part is broken, torn or missing.
- Do not use the chair before the child can sit up by itself.
- Do not elevate the high chair on any structure or table.
- Do not use the chair as a step stool.
- Do not use with a booster seat
- TRIPP TRAPP® is intended for use when your child is capable of sitting upright unassisted (approximately 6 months)
- Front of footrest not to exceed front legs of chair at floor level
- NEVER use the Tripp Trapp® chair without any glider.
- Remember to retighten all screws 2-3 weeks after assembly of the chair. After that you should check on and retighten the screws if necessary on a regular basis, e.g. every second month. Keep the Allen key for future use, but out of the childs reach.

◀ Table
Be aware of the risk that a big frame under the table top makes it easier for children to push their legs against the table and tilt backwards. Also note that Tripp Trapp® is designed for dining tables 28-30" (72-76cm) high.

▼ Warning
NEVER let your child play around the Tripp Trapp® chair if it is not in the intended position for use.

▼ Footrest
Make sure the forward edge of the footrest NEVER exceeds the front tip of the chair legs at floor level. This may cause the chair to be unstable when a child climbs in and out of the Tripp Trapp® chair.

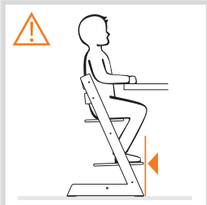

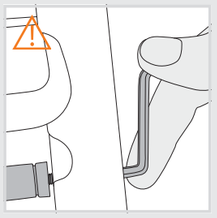

◀ Warning
When the footrest is positioned close to the metal rod, there will be a small gap between the inside of the chair legs and the metal rod. This is perfectly normal. Never try to use excessive force to make the metal rod touch the side legs of the chair as this can cause damage to the chair and/or make it unstable.

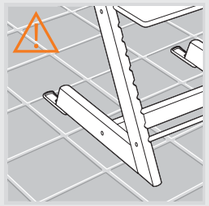

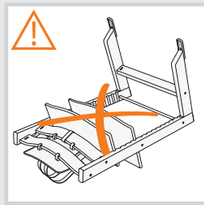

▲ Rough surfaces (uneven floors), for instance rugs and tiles
To prevent the Tripp Trapp® chair from tilting when pushed backwards, it has plastic gliders underneath the legs. Their function is to enable the chair to slide backwards and return to an upright position when pushed backwards. To make sure that the gliders function as intended, the chair should be placed on a surface enabling the chair to slide backwards. Thus, the surface should be level, stable and with a certain hardness. Uneven and/or rough surfaces, for instance some tiled floors, and rugs/carpets that are soft or with long loose ends, are generally unsuitable for chairs used by toddlers. Although the Tripp Trapp® chair is recognized for its stability, these conditions also apply here.
The gliders as well as the floor must be kept clean.
To further increase the backward stability of the Tripp Trapp® highchair, a replaceable, extended rear glider ("Extended Glider") has been developed for the Tripp Trapp® highchair. For the period when the chair is used with a harness or the Tripp Trapp® Baby Set, we recommend that you always use it with the Tripp Trapp® Extended Glider. This is especially important if the chair is placed on a soft carpet and/or at a table where the child can push against a frame underneath the tabletop with its feet.

READ CAREFULLY BEFORE ASSEMBLING YOUR TRIPP TRAPP® CHAIR.
On the fold out page of this user guide you will find pictures that describe the assembly of your Tripp Trapp® chair and Tripp Trapp® Baby Set. The Baby Set should only be used with the seat plate in the first groove from top of the chair.

Parts
10 Metal screws • 6 Metal nuts • 1 Allen Key • 2 Curved backrests 2 Metal cross bars • 1 Wooden base cross bar • 1 Seat • 1 Footrest • 2 Legs

1. Attach the base cross bar to the legs (grooves face inside). Important to insert the shallow end of nut first!
2. Insert screws and tighten firmly.
3. Attach the two metal crossbars and tighten loosely
4. Attach the two curved back rests. Insert metal nut with shallow end first and tighten loosely. NOTE: Backrest with strap goes into bottom slots.
5. Slide seat and footrest into slots, with straight edge facing forward. Make sure the height and depth of the seat and footrest suit the size of your child (see instruc tions for seat and footrest adjustments in this user guide).
6. Place the chair on a level surface. Finally tighten all screws firmly in the order given.

SEAT AND FOOTREST ADJUSTMENT
It is important to adjust the depth and height of the seat and footrest to fit the size of your child. See illustrations on the fold out page, and description below. The settings of the seat and footrest should be checked as the child grows – at least once a year!
The seat plate and the footrest must be supported by the full length of the grooves on the sides (not half way supported).

Seat placement
Height – The seat is set at the correct height when your child's elbows are level with the table top.
Depth – For correct depth of the seat, position the child's back against the backrest with the seat supporting ¾ of the thighs. For the child's best comfort it is important that the seat depth is not too deep. Leave comfortable space between the front edge of the seat and back of the child's knee.
For a child 6-8 months it may amaze you how small seat they actually need! The seat plate should not protrude more than 1½-2" (4-5cm) in front of the chair side legs.

Footrest placement
Height – The footrest is set at the correct height when the sole of the child's foot can rest flat on the footrest, while the thighs are touching the seat.
Depth – Make sure the forward edge of the footrest NEVER exceeds the front tip of the chair legs at floor level

Table of age and approxmate adjustment
This table is a rough guide for the height adjustment of seat and footrest according to the age of you child. Child differ in size according to age, so always make sure that your child is seated correctly according to the instructions given in this user guide.

AGE	SEAT	FOOTREST
6 months	1	5
1 1/2 year	2	6
3 year	2	8
7 year	3	11
10 year	4	14
Teen/ Adult	n.a.	4-5*

**) Use footrest as seat. Therefore seat is not applicable.*

RESTRAINT SYSTEM OPERATION
Always use the restraint system when the seat is in the 1st, 2nd or 3rd grooves from the top. Place child in seat. Pull each arm through the loop formed by the shoulder and waist strap, and place in child's lap. Crotch strap comes up between child's legs. Attach each shoulder strap to the crotch strap. Adjust length of shoulder, waist and crotch strap to restrain child in seat. Crotch strap length should be adjusted so that connector is at waist height.
The restraint system can be removed when your child has reached the age of 36 months AND is able to sit safely on TRIPP TRAPP®. Use a tool to remove the clip under the seat plate to detach the crotch strap. Use a screwdriver to detach the rest of the harness from the backrest.

Product information: The chair is made of cultivated beech wood. The varnish contains no harmful substances, and the liberation of formaldehyde from the varnish complies with E1 requirements.

Safety approval: Tripp Trapp® chair complies with AS 4684:2009, EN 14988:2006, ASTM F404-07.

CLEANING AND MAINTENANCE
Wipe with a clean damp cloth, wipe off excess of water with a dry cloth. Moisture will crack stain. We do not recommend the use of any detergent or micro fibre cloth. Colours may change if the chair is exposed to the sun.

Accessories

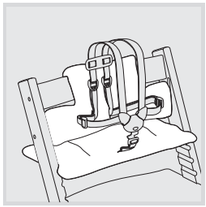

Tripp Trapp® Cushion
Comes in several colours and designs. It fits your Tripp Trapp® chair both with and without Tripp Trapp® Baby Set.

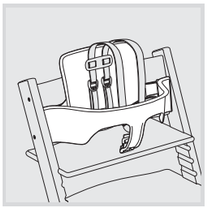

Tripp Trapp® Babyset
Babyset intended for children from 6 months and up to 36 months.

RIGHT OF COMPLAINT AND EXTENDED WARRANTY

Applicable worldwide in respect of the chair TRIPP TRAPP®, hereinafter referred to as the product.

RIGHT OF COMPLAINT

The customer has a right of complaint pursuant to the consumer protection legislation applicable at any given time, which legislation may vary from country to country.

Generally speaking, STOKKE AS does not grant any additional rights over and above those laid down by the legislation applicable at any given time, although reference is made to the "Extended Warranty" described below. The rights of the customer under the consumer protection legislation applicable at any given time are additional to those under the "Extended Warranty", and are not affected thereby.

STOKKE® "EXTENDED WARRANTY"

However, STOKKE AS, Håhjem, N-6260 Skodje, Norway, grants an "Extended Warranty" to customers who register their product in our Warranty Database. This may be done via our webpage www.stokke.com/guarantee. Alternatively, one may fill in and submit the warranty form, which is inserted into the instruction manual accompanying the product. Upon registration, a warranty certificate will be issued and sent to the customer electronically (e-mail) or by ordinary mail.

Registration in the Warranty Database entitles the owner to an "Extended Warranty" as follows:
• **7-year** warranty against any manufacturing defect in the product.

The "Extended Warranty" also applies if the product has been received as a gift or purchased second-hand. Consequently, the "Extended Warranty" may be invoked by whoever is the owner of the product any given time, within the warranty period, and subject to the warranty certificate being presented by the owner.

The STOKKE® "Extended Warranty" is conditional upon the following:

- Normal use.
- The product only having been used for the purpose for which the product is intended.
- The product having undergone ordinary maintenance, as described in the maintenance/instruction manual.
- Upon the "Extended Warranty" being invoked, the warranty certificate shall be presented, together with the original date-stamped purchase receipt. This also applies to any secondary or subsequent owner.
- The product appearing in its original state, hereunder that the only parts used have been supplied by STOKKE® and are intended for use on, or together with, the product. Any deviations herefrom require the prior written consent of STOKKE®.
- The serial number of the product not having been destroyed or removed.

The STOKKE® "Extended Warranty" does not cover:

- Issues caused by normal developments in the parts making up the product (e.g. colouration changes, as well as wear and tear).
- Issues caused by minor variations in materials (e.g. colour differences between parts).
- Issues caused by extreme influence from external factors like sun/light, temperature, humidity, environmental pollution, etc.
- Damage caused by accidents/mishaps – for example any other objects having bumped into the product or any person having over turned the product by colliding with it. The same applies if the product has been overloaded, for example in terms of the weight placed on it.
- Damage inflicted on the product by external influence, for example when the product is being shipped as luggage.
- Consequential damage, for example damage inflicted on any persons and/or any other objects.
- If the product has been fitted with any accessories that have not been supplied by STOKKE®, the "Extended Warranty" shall lapse.
- The "Extended Warranty" shall not apply to any accessories that have been purchased or supplied together with the product, or at a subsequent date.

STOKKE® will under the "Extended Warranty":

- Replace or – if STOKKE® thus prefers – repair the defective part, or the product in its entirety (if necessary), provided that the product is delivered to a reseller.
- Cover normal transport costs for any replacement part/product from STOKKE® to the reseller from whom the product was purchased. – No travel costs on the part of the purchaser are covered under the terms of the warranty.
- Reserve the right to replace, at the time of the warranty being invoked, defect parts by parts that are of approximately the same design.
- Reserve the right to supply a replacement product in cases where the relevant product is no longer being manufactured at the time of the warranty being invoked. Such product shall be of corresponding quality and value.

How to invoke the "Extended Warranty":

Generally speaking, all requests relating to the "Extended Warranty" shall be made to the reseller from whom the product was purchased. Such request shall be made as soon as possible after any defect has been discovered, and shall be accompanied by the warranty certificate as well as the original purchase receipt.

Documentation/evidence confirming the manufacturing defect shall be presented, normally by way of the product being brought along to the reseller, or otherwise being presented to the reseller or a STOKKE® sales representative for inspection.

The defect will be remedied in accordance with the above provisions if the reseller or a STOKKE® sales representative determines that the damage is caused by a manufacturing defect.

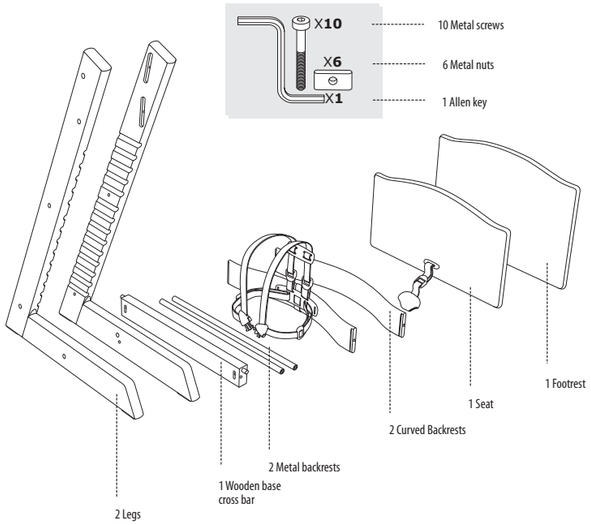

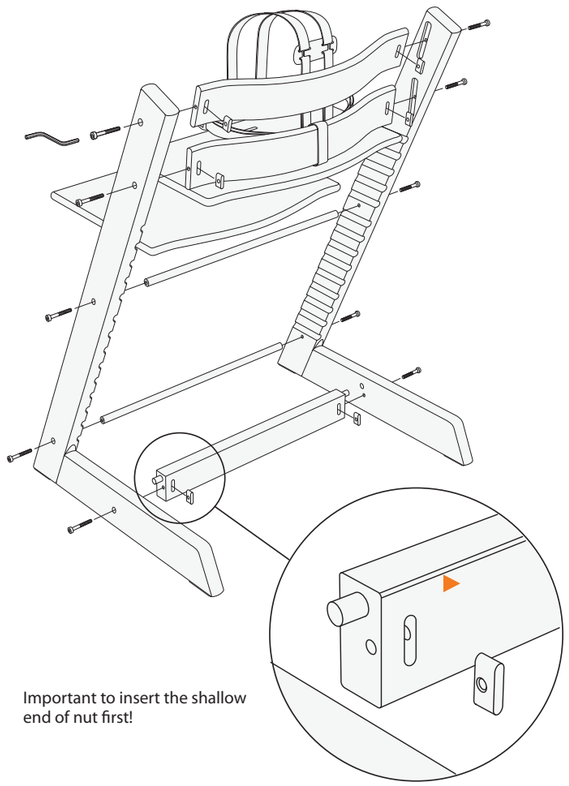

Important to insert the shallow end of nut first!

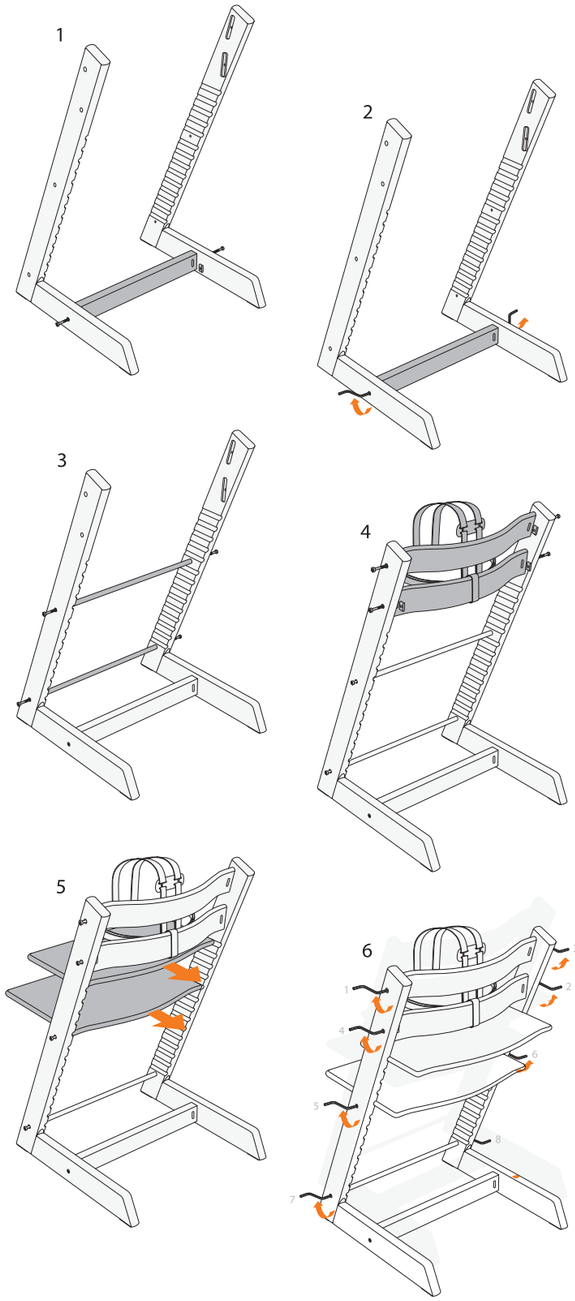

ASSEMBLING TRIPP TRAPP® EXTENDED GLIDER

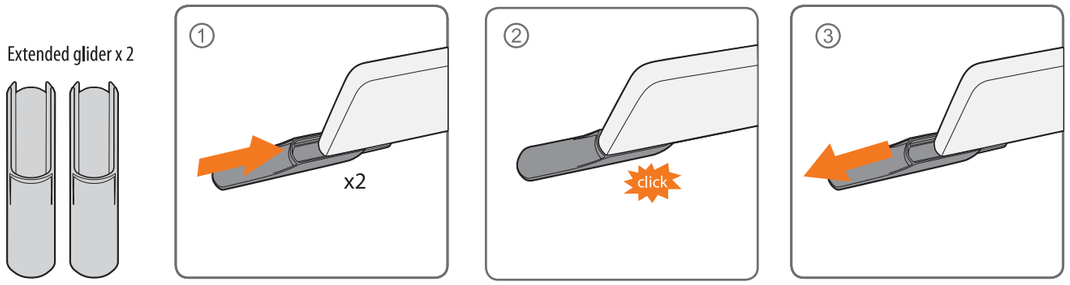

SEAT AND FOOTREST ADJUSTMENT

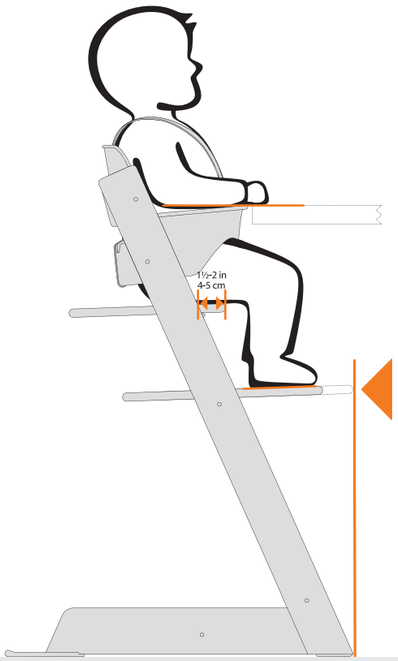

RESTRAINT SYSTEM OPERATION

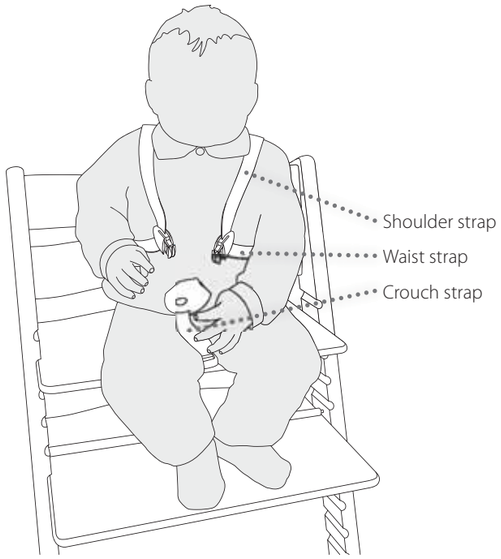

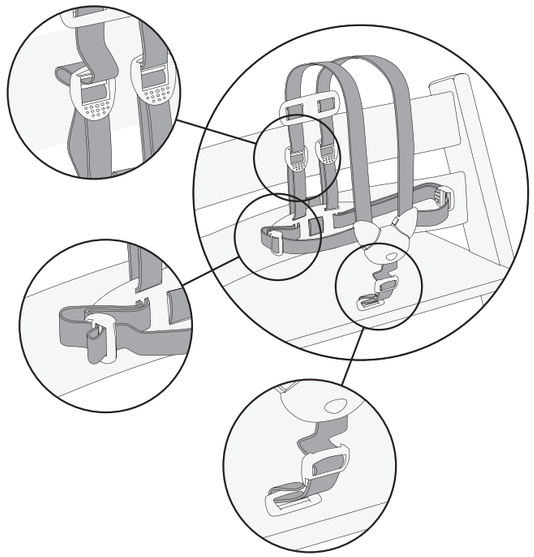

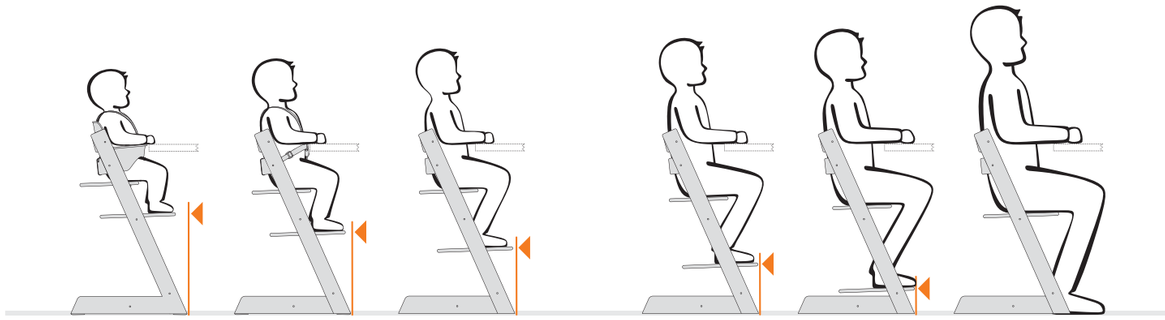

AUSTRALIA	Exquira Pty Ltd. Tel. +61 (0)2 9417 3445, E-mail: info@exquira.com.au
AUSTRIA	Stokke Customer Service Tel: +49 7031 611 58 0, Fax: +49 70 31 611 58 60, E-mail: stokke.at@stokke.com
BELGIUM	Stokke Customer Service Tel: +49 7031 611 58 0, Fax: +49 7031 611 58 60, E-mail: info-belux@stokke.com
BULGARIA, CROATIA , CYPRUS, CZECH REPUBLIC, GREECE, HUNGARY, POLAND, ROMANIA, SERBIA, SLOVAKIA AND SLOVENIA:	Stokke Customer Service Tel: +49 7031 611 58 0, Fax: +49 7031 611 58 60, Email info.eu@stokke.com
CHINA, SOUTH EAST ASIA	China/South East Asia: Stokke Hong Kong Ltd., Tel: (852) 2987 8178, E-mail: info.asia@stokke.com
DENMARK	Stokke Customer Service Tel. +45 98 79 19 29, Fax. +45 98 79 19 39, E-mail: info.dk@stokke.com
FINLAND	Stokke Customer Service Tel: +49 7031 611 58 0, Fax: +49 70 31 611 58 60, E-mail: info.fi@stokke.com
FRANCE	Stokke Customer Service Tel: +49 7031 611 58 0, Fax +49 70 31 611 58 60, E-mail: info.fr@stokke.com
GERMANY	Stokke Customer Service Tel: +49 7031 611 58 0, Fax: +49 7031 611 58 60, E-mail: info.de@stokke.com
IRELAND	Stokke Customer Service Tel: +49 7031 611 58 0, Fax +49 70 31 611 5860, E-mail: info.uk@stokke.com
ISRAEL	Shevtov G. Reiss Distributors. Tel: 972 9 8912314, E-mail: reissg@netvision.net.il
ITALY	Stokke Customer Service , Tel: +49 7031 611 58 0, Fax: +49 7031 611 58 60, E-mail: info.it@stokke.com
JAPAN	Stokke Ltd. Tel. +81 3 6892 3377, Fax. +81 3 6892 3386, E-mail: info.jp@stokke.com
LUXEMBOURG	Stokke Customer Service Tel: +49 7031 611 58 0, Fax: +49 7031 611 58 60, E-mail: info-belux@stokke.com
MEXICO	Stokke Customer Service Tel. +34 943 130 596, Fax. +34 943 133 201, E-mail: us.orders@stokke.com
NETHERLANDS	Stokke Customer Service Tel. +31 13-5837020, Fax. +31 13-5837021, E-mail: info-nl@stokke.com
NEW ZEALAND	Viking Imports Ltd. Tel: +64 9 4267822, Email: info@vikingimports.co.nz
NORWAY	Stokke Customer Service Tel. +47 70 24 49 70, Fax. +47 70 24 49 90, E-mail: info.no@stokke.com
PORTUGAL	Stokke Atendimento ao Cliente Tel. +34 943 130 596, Fax. +34 943 133 201, E-mail: info.pt@stokke.com
RUSSIA	Da Baby. Tel: +7 (0) 495 688 7756, Email: da-baby@redline.ru
SOUTH-AMERICA	Stokke Customer Service Tel. +34 943 130 596, Fax. +34 943 133 201, E-mail: south.america@stokke.com
SOUTH-KOREA	Stokke Korea Co., Ltd. Tel: 82-1544-8342 Fax:82-2-3453-6347 E-mail: cs.kr@stokke.com
SPAIN	Stokke Atención al Cliente Tel. (+34) 943 130 506 Fax (+34) 943 133 201, E-mail: info.es@stokke.com
SWEDEN	Stokke Customer Service Tel: 08-4474560 Fax. 08-4474565, E-mail: info.se@stokke.com
SWITZERLAND	Stokke Customer Service Tel: +49 7031 611 58 0, Fax: +49 70 31 611 58 60, E-mail: info.ch@stokke.com
TURKEY	Nest By Mozaik. Tel: +90 212 353 09 13, E-mail: nest@mozaikdesign.com
UKRAINE	Millenium Ltd. Tel +38 044 492 00 22
UNITED ARAB EMIRATES /MIDDLE EAST	DutchKid FZCO, Tel: +97 143618142 E-mail: info@dutchkid.com
UNITED KINGDOM	Stokke Customer Service Tel: +49 7031 611 58 0, Fax +49 70 31 611 58 60, E-mail: info.uk@stokke.com
USA	Stokke Customer Contact: STOKKE LLC, 5 High Ridge Park, Suite 105, Stamford CT 06905. Tel: 203-355-7800. E-mail: info-usa@stokke.com
OTHER MARKETS	Locate your nearest retailer at www.stokke.com

V3 – March 2013. 220300 TRIPP TRAPP Userguide AU